TEB0745 TRM

Revision v.135

Exported on 2020-12-30

Online version of this document:

https://wiki.trenz-electronic.de/display/PD/TEB0745+TRM

1 Table of Contents

1 Table of Contents 2
2 Table of Figures 4
3 Table of Tables 5
4 Overview 7
4.1 Key Features 7
4.2 Block Diagram 7
4.3 Main Components 9
4.4 Initial Delivery State 9
4.5 Configuration Signals 10
5 Signals, Interfaces and Pins 11
5.1 Board to Board (B2B) I/Os 11
5.2 XMOD Pin Header 12
5.3 SFP+ Connectors 13
5.4 SD Card Socket 14
5.5 RJ45 Connector 15
5.6 Test Points 15
6 On-board Peripherals 17
6.1 EEPROM 17
6.2 DIP Switches 17
6.3 I2C Switch 18
6.4 IO Expanders 19
6.5 Push Buttons 21
6.6 LEDs 21
7 Power and Power-On Sequence 22
7.1 Power Supply 22
7.2 Power Consumption 22
7.3 Power Distribution Dependencies 22
7.4 Power-On Sequence 22
7.5 Power Rails 23
8 Board to Board Connectors 25
9 Technical Specifications 26
9.1 Absolute Maximum Ratings 26
9.2 Recommended Operating Conditions 26
9.3 Physical Dimensions 26
10 Currently Offered Variants 28

11 Revision History 29
11.1 Hardware Revision History 29
11.2 Document Change History 30
12 Disclaimer 31
12.1 Data Privacy 31
12.2 Document Warranty 31
12.3 Limitation of Liability 31
12.4 Copyright Notice 31
12.5 Technology Licenses 31
12.6 Environmental Protection 31
12.7 REACH, RoHS and WEEE 32

2 Table of Figures

Figure 1: TEB0745 block diagram 8
Figure 2: TEB0745 main components 8
Figure 3: Power Distribution 22
Figure 4: Power Sequency 23
Figure 5: Physical dimensions drawing 27
Figure 6: Board hardware revision number. 30

3 Table of Tables

Table 1: Initial delivery state of programmable devices on the module 10
Table 2: Boot process. 10
Table 3: Reset process. 10
Table 4: General PL I/O to B2B connectors information 11
Table 5: JTAG pins connection 12
Table 6: Xmod Adapter DIP-Switch Setting Description 12
Table 7: SFP Connectors 13
Table 8: SD card interface MIOs and pins 14
Table 9: LAN Transformer 15
Table 10: Test Points Information 15
Table 11: On board peripherals 17
Table 12: I2C EEPROM interface MIOs and pins 17
Table 13: I2C address for EEPROM 17
Table 14: DIP Switch S1 17
Table 15: DIP Switch S4 17
Table 16: I2C Switch 18
Table 17: I2C Address of I2C Switch 19
Table 18: IO Expander Information 13
Table 19: SFP Connectors 13
Table 20: I2C Addresses of I/O Expanders 20
Table 21: On-board push button =s 21
Table 22: On-board LEDs 21
Table 23: Power Consumption 22
Table 24: Module power rails. 23
Table 25: PS absolute maximum ratings 26
Table 26: Recommended operating conditions. 26
Table 27: Trenz Electronic Shop Overview 28
Table 28: Hardware Revision History 29
Table 29: Document change history. 30

4 Overview

The carrier board TEB0745 was especially designed and developed for the use of Trenz Electronic module TE0745.

Refer to http://trenz.org/teb0745-info for the current online version of this manual and other available documentation.

4.1 Key Features

- **Module:**
  - Trenz Electronic Module TE0745
  - Temperature: -40 to 85 °C
- **On Board:**
  - 24V power supply terminal
  - 1 x EMI Network Filter
  - 3 x Variable Step Down Regulator Module (VDRM) with head sink
  - 2 x Synchronous Buck Regulator
  - 2 x Button (User / Reset)
  - 2 x LED (Green)
- **Interfaces:**
  - 1 x XMOD (TE0790) Pin Header (JTAG / UART)
  - 1 x Pin Header (JTAG)
  - 1 x microSD connector
  - 1 x RJ45 Ethernet connector
  - 1 x USB Host Connector
  - 8 x SFP-Connector
  - 6 x Pin Header 50 pol. (FPGA Bank I/O's and Power)
  - 6 x Pin Header 12 pol. (FPGA Bank I/O's and Power)
  - 1 x battery holder
  - 2 x DIP Switch Array (VCC_HR_B / Modi)
- **Dimension:** 200 mm x 231 mm

4.2 Block Diagram

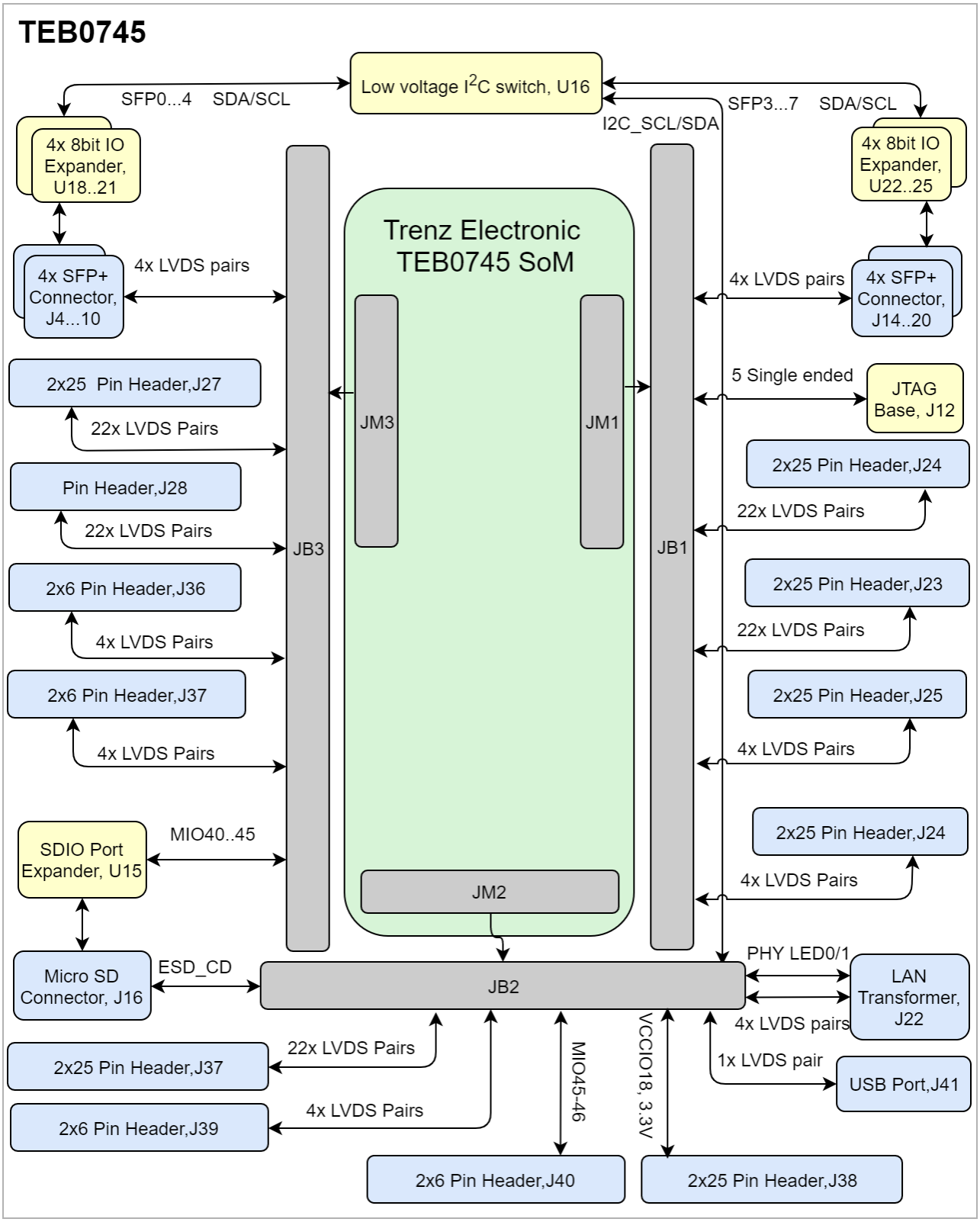

Figure 1: TEB0745 block diagram

4.3 Main Components

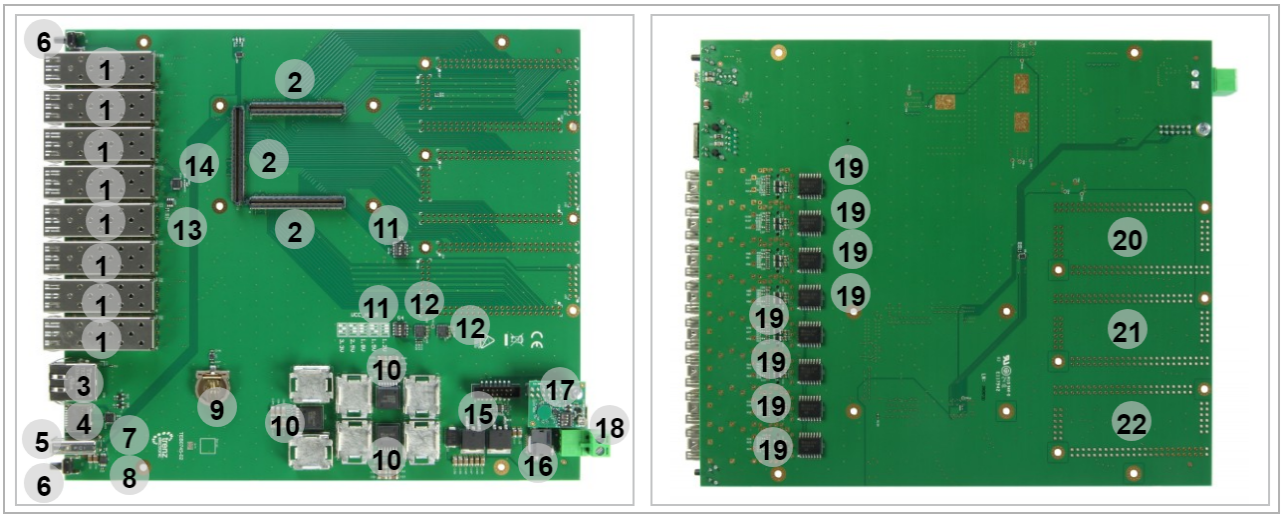

Figure 2: TEB0745 main components

1. SFP+ Connector, J4 J6 J8 J10 J13 J15 J18 J20
2. Board to Board Connector (B2B), J1 J2 J3
3. RJ45 Gigabit Ethernet connector, J22
4. SD card connector, J16
5. USB connector, J41
6. Push Button, S2 S3
7. SDIO port expander, U15
8. Power distribution switch, U4
9. Battery holder, B1
10. Mag I^3C power, U26 U12 U5
11. Push bottun switch, S1 S4
12. Buck regulator, U6 U7
13. I^2C EEPROM, U33
14. Low voltage chanel I^2C switch, U16
15. Overvoltage, undervoltage, reversesupply protection controller, U13
16. EMI suppression filter, U29
17. JTAG interface, J12
18. Power jack, J31
19. 8bit IO expandor for I^2C bus, U18 U25
20. Pin Headers J23...26 (Not Assembled)
21. Pin Headers J27-J28-J32-J36 (Not Assembled)
22. Pin Headers J37...40 (Not Assembled)

4.4 Initial Delivery State

Storage device name	Content	Notes
EEPROM	EUI-64 number programmed	Can be used for MAC

Table 1: Initial delivery state of programmable devices on the module

4.5 Configuration Signals

MODE Signal State	Connected to	B2B	Status	Boot Mode
BOOTMODE	S1	J2-133	Open	QSPI
			Short	SD Card

Table 2: Boot process.

Schematic	Connected to	B2B	Note
RST_IN_N	Push Button, S2	J2-131	Low Active Reset

Table 3: Reset process.

5 Signals, Interfaces and Pins

5.1 Board to Board (B2B) I/Os

FPGA bank number and number of I/O signals connected to the B2B connector:

B2B Connector	Interfaces	Number of I/O	Notes
J1	User I/O	48 singel ended, 24 Differential 2 singel ended	Connected to Bank 13
		48 singel ended, 24 Differential 2 singel ended	Connected to Bank 12
	JTAG Interface	5 single ended	TCK, TDI, TMS, TDO, JTAG_EN
	SFP+ Connector	8 Diff	SPF4....7_RX_N/P , SPF4....7_TX_N/P
J2	Ethernet PHY	4 Differential	
		2 single ended	PHY_LED0...1
	USB	1 Differential	OTG_N/P
	Control Signals	3 single ended	PS_SRST, BOOTMODE, RST_IN_N
	Power Control Signal	2 single ended	PWR_PS_OK, PWR_PL_OK
	I^2C Bus	2 single ended	I2C_SDA, I2C_SCL
	User I/O	4 single ended	MIO12...15

B2B Connector	Interfaces	Number of I/O	Notes
J3	User I/O	6 Single ended	MIO46...51
	SD Card Connector	6 Single ended	SD_CLK, SD_CMD, SD_DAT0...3 (MIO40...45)
	SFP+ Connector	8 Differential	SPF0....3_RX_N/P , SPF0....3_TX_N/P

Table 4: General PL I/O to B2B connectors information

5.2 XMOD Pin Header

JTAG access to the TEB0745 SoM is available through B2B connector JB1 and JB2. JTAG_EN is connected to J1-138, JTAG_EN can be activated through DIP Switch S1-2.

Designator	Connected to	B2B Pin	XMOD Header JB1	Note
A	MIO15	J2-129	JB1-3	UART TX - Input to the module
B	MIO14	J2-127	JB1-7	UART RX - Output of the module
C	TCK	J1-143	JB1-4	JTAG interface signal
D	TDO	J1-145	JB1-8	JTAG interface signal
F	TDI	J1-142	JB1-10	JTAG interface signal
H	TMS	J1-144	JB1-12	JTAG interface signal
G	RST_IN_N	J2-131	JB1-11	RESET will be connected to Push Button on JTAG Programmer

Table 5: JTAG pins connection
There is a DIP switch, S2, on TE0790 adapter which must be set as following.

DIP Switch,S2	Default	Description
1	ON	Update Mode JTAG access to SC CPLD only

DIP Switch,S2	Default	Description
2	OFF	Must be always in OFF state.
3	OFF	VIO is supplied from Module
4	OFF	3.3V is high impedance

Table 6: Xmod Adapter DIP-Switch Setting Description

5.3 SFP+ Connectors

The TEB0745 is equipped with 8 SFP+ Connectors,

Pin	Connected to								Notes
	SFP+ , J4	SFP+ , J6	SFP+ , J8	SFP+ , J10	SFP+, J13	SFP+, J15	SFP +, J18	SFP+ , J20	
TD+	B2B, J3	B2B, J3	B2B, J3	B2B, J3	B2B, J1	B2B, J1	B2B, J1	B2B, J1	GT
TD-	B2B, J3	B2B, J3	B2B, J3	B2B, J3	B2B, J1	B2B, J1	B2B, J1	B2B, J1	GT
RD+	B2B, J3	B2B, J3	B2B, J3	B2B, J3	B2B, J1	B2B, J1	B2B, J1	B2B, J1	GT
RD-	B2B, J3	B2B, J3	B2B, J3	B2B, J3	B2B, J1	B2B, J1	B2B, J1	B2B, J1	GT
TX FAULT	IO Exp, U18	IO Exp, U19	IO Exp, U20	IO Exp, U21	IO Exp, U22	IO Exp, U23	IO Exp, U24	IO Exp, U25	SFP_CTRL
TX DISABLE	IO Exp, U18	IO Exp, U19	IO Exp, U20	IO Exp, U21	IO Exp, U22	IO Exp, U23	IO Exp, U24	IO Exp, U25	SFP_CTRL
MOD-DEF 2	IO Exp, U18	IO Exp, U19	IO Exp, U20	IO Exp, U21	IO Exp, U22	IO Exp, U23	IO Exp, U24	IO Exp, U25	SFP_CTRL

Pin	Connected to								Notes
	SFP+ , J4	SFP+ , J6	SFP+ , J8	SFP+ , J10	SFP+, J13	SFP+, J15	SFP +, J18	SFP+ , J20	
MOD -DEF 1	IO Exp, U18	IO Exp, U19	IO Exp, U20	IO Exp, U21	IO Exp, U22	IO Exp, U23	IO Exp, U24	IO Exp, U25	SFP_CTRL
MOD -DEF 0	IO Exp, U18	IO Exp, U19	IO Exp, U20	IO Exp, U21	IO Exp, U22	IO Exp, U23	IO Exp, U24	IO Exp, U25	SFP_CTRL
RS0	IO Exp, U18	IO Exp, U19	IO Exp, U20	IO Exp, U21	IO Exp, U22	IO Exp, U23	IO Exp, U24	IO Exp, U25	SFP_CTRL
LOS	IO Exp, U18	IO Exp, U19	IO Exp, U20	IO Exp, U21	IO Exp, U22	IO Exp, U23	IO Exp, U24	IO Exp, U25	SFP_CTRL
RS1	IO Exp, U18	IO Exp, U19	IO Exp, U20	IO Exp, U21	IO Exp, U22	IO Exp, U23	IO Exp, U24	IO Exp, U25	SFP_CTRL

Table 7: SFP Connectors

5.4 SD Card Socket

Power supply voltage for SD card holder is 3.3V.

Signals	Connected to	B2B	Notes
SD_CLK	MIO40	J3-150	
SD_CMD	MIO41	J3-152	
SD_DAT0	MIO42	J3-154	
SD_DAT1	MIO43	J3-156	
SD_DAT2	MIO44	J3-158	
SD_DAT3	MIO45	J3-160	

Table 8: SD card interface MIOs and pins

5.5 RJ45 Connector

Ethernet Socket is connected to Board to Board (B2B) JM2.

Signal	B2B	Notes
PHY_MDIO0_P	J2-120	
PHY_MDIO_N	J2-122	
PHY_MDIO1_P	J2-126	
PHY_MDIO1_N	J2-128	
PHY_MDIO2_P	J2-132	
PHY_MDIO2_N	J2-134	
PHY_MDIO3_P	J2-138	
PHY_MDIO3_N	J2-140	
PHY_LED0	J2-144	
PHY_LED1	J2-146	

Table 9: LAN Transformer

5.6 Test Points

Test Point	Signals	B2B Connector	Notes
TP 1	5V	-	
TP 2	VBAT_IN	J1-146	
TP 3	VCCIO18V	J2- J3	
TP 4	VCC_HR_B	J1	
TP 5-9	GND	-	
TP 10	PS_1.8V	J2	

Test Point	Signals	B2B Connector	Notes
TP 11	VCC_HR_B	J1	
TP 12	3.3V	J1- J2	
TP 13	-	-	
TP 14	-	-	
TP 15	PWR_PL_OK	J2- 135	
TP 16	PWR_PS_OK	J2-139	
TP 17	24V_FUSED	-	
TP 18	3.3V_SFP	-	

Table 10: Test Points Information

6 On-board Peripherals

Chip/Interface	Designator	Notes
EEPROM(see page 17)	U33	
DIP Switches(see page 17)	S1, S4	
I2C Switch(see page 18)	U16	
I/O Expander(see page 19)	U18...U25	
Push Buttons(see page 21)	S2, S3	
LEDs(see page 21)	D1, D5	

Table 11: On board peripherals

6.1 EEPROM

MIO Pin	Schematic	B2B	Notes
MIO10	I2C_SCL	J2-119	
MIO11	I2C_SDA	J2-121	

Table 12: I2C EEPROM interface MIOs and pins

I2C Device	Designator	I2C Address	Notes
EEPROM	U33	0x51	

Table 13: I2C address for EEPROM

6.2 DIP Switches

There are two DIP Switches S1,S4.

Designator	Connected to	B2B	Note
S1-A	BootMode	J2-133	

Designator	Connected to	B2B	Note
S1-B	JTAG_EN	J1-148	
S1-C	-		
S1-D	PS_SW	J2-123	

Table 14: DIP Switch S1
VCC_HR_B voltage can be selected using DIP Switch S4 .

S4-1	S4-2	S4-3	S4-4	Power VCC_HR_B	Notes
OFF	OFF	OFF	N.C.	1,8V	
OFF	OFF	ON	N.C.	1,5V	
OFF	ON	OFF	N.C.	3,3V	
OFF	ON	ON	N.C.	2,5V	
ON	OFF	OFF	N.C.	0,8V	
ON	OFF	ON	N.C.	Do not use	
ON	ON	OFF	N.C.	1,25V	
ON	ON	ON	N.C.	1,2V	

Table 15: DIP Switch S4

6.3 I2C Switch

There is a I^2C Switch on the TEB0745 which can be used in order to controll the SPF+ Connectors.

Pin	Schematic	Connected to	Notes
VCC	3.3V		
SCL	I2C_SCL	B2B, J2	
SDA	I2C_SDA	B2B, J2	
nRESET	I2C_RST	Voltage Translator, U34	

Pin	Schematic	Connected to	Notes
A0	GND	Low	I2C address is 0x72
A1	3.3V	High	I2C address is 0x72
A2	GND	Low	I2C address is 0x72
SD0/ SC0	SFP0_SDA / SFP0_SDA	SFP+ Connector, J4	
SD1/ SC1	SFP1_SDA / SFP1_SDA	SFP+ Connector, J6	
SD2/ SC2	SFP2_SDA / SFP2_SDA	SFP+ Connector, J8	
SD3/ SC3	SFP3_SDA / SFP3_SDA	SFP+ Connector, J10	
SD4/ SC4	SFP4_SDA / SFP4_SDA	SFP+ Connector, J13	
SD5/ SC5	SFP5_SDA / SFP5_SDA	SFP+ Connector, J15	
SD6/ SC6	SFP6_SDA / SFP6_SDA	SFP+ Connector, J18	
SD7/ SC7	SFP7_SDA / SFP7_SDA	SFP+ Connector, J20	

Table 16: I2C Switch

I2C Device	Designator	I2C Address	Notes
I2C Device	U16	0x72	

Table 17: I2C Address of I2C Switch

6.4 IO Expanders

The TEB0745 is equipped with 8 I/O Expanders.

Pin	Connected to								Notes
	IO Exp, U18	IO Exp, U19	IO Exp, U20	IO Exp, U21	IO Exp, U22	IO Exp, U23	IO Exp, U24	IO Exp, U25	
nINT	Not Connected	Not Connected	Not Connected	Not Connected	Not Connected	Not Connected	Not Connected	Not Connected	

Pin	Connected to								Notes
	IO Exp, U18	IO Exp, U19	IO Exp, U20	IO Exp, U21	IO Exp, U22	IO Exp, U23	IO Exp, U24	IO Exp, U25	
SCL	I2C Switch, U16 B2B, J2	I2C Switch, U16 B2B, J2	I2C Switch, U16 B2B, J2	I2C Switch, U16 B2B, J2	I2C Switch, U16 B2B, J2	I2C Switch, U16 B2B, J2	I2C Switch, U16 B2B, J2	I2C Switch, U16 B2B, J2	
SDA	I2C Switch, U16 B2B, J2	I2C Switch, U16 B2B, J2	I2C Switch, U16 B2B, J2	I2C Switch, U16 B2B, J2	I2C Switch, U16 B2B, J2	I2C Switch, U16 B2B, J2	I2C Switch, U16 B2B, J2	I2C Switch, U16 B2B, J2	
A0	GND	3.3V	GND	3.3V	GND	3.3V	GND	3.3V	
A1	GND	GND	3.3V	3.3V	GND	GND	3.3V	3.3V	
A2	GND	GND	GND	GND	3.3V	3.3V	3.3V	3.3V	
VCC	3.3V	3.3V	3.3V	3.3V	3.3V	3.3V	3.3V	3.3V	
P0...P7	SFP+, J4	SFP+, J6	SFP+, J8	SFP+, J10	SFP+, J13	SFP+, J15	SFP+, J18	SFP+, J20	

Table 18: SFP Connectors

Table 19: IO Expander Information

In the following table you can find I2C addresses of I/O Expanders which would be designated by pins A0,A1 and A2.

I2C Device	Designator	I2C Address	Notes
I/O Expander	U18	0x20	
	U19	0x21	
	U20	0x22	
	U21	0x23	
	U22	0x24	

I2C Device	Designator	I2C Address	Notes
	U23	0x25	
	U24	0x26	
	U25	0x27	

Table 20: I2C Addresses of I/O Expanders

6.5 Push Buttons

There are two push buttons S2, S3.

Designator	Connected to	B2B	Active Level	Note
S3	USR_BTN	J3-153	Active high	
S2	RST_IN_N	J2-131	Active high	General Reset

Table 21: On-board push button =s

6.6 LEDs

Designator	Color	B2B	Connected to	Active Level	Note
D1	Green	J3-149	MIO48	Active High	LED1
D5	Green	J3-151	MIO49	Active High	LED2

Table 22: On-board LEDs

7 Power and Power-On Sequence

7.1 Power Supply

Power supply with minimum current capability of 2.5 A for system startup is recommended.

7.2 Power Consumption

Power Input Voltage	Typical Current
24V	TBD*
VBAT	TBD*

Table 23: Power Consumption
* TBD - To Be Determined

7.3 Power Distribution Dependencies

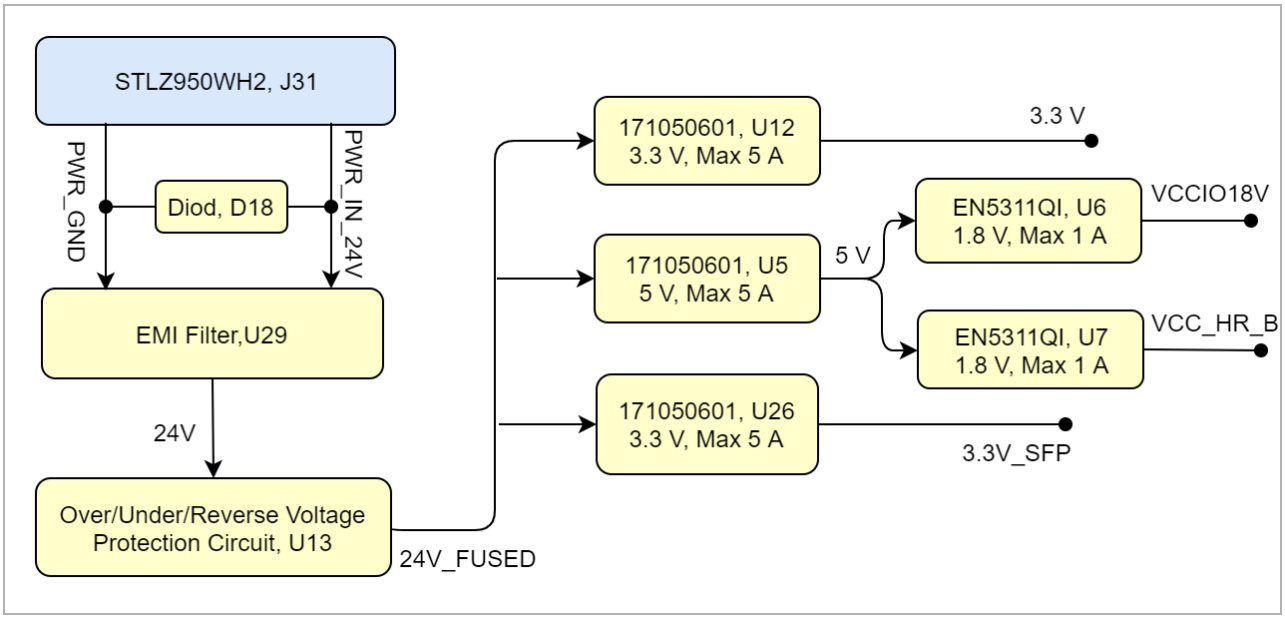

Figure 3: Power Distribution

7.4 Power-On Sequence

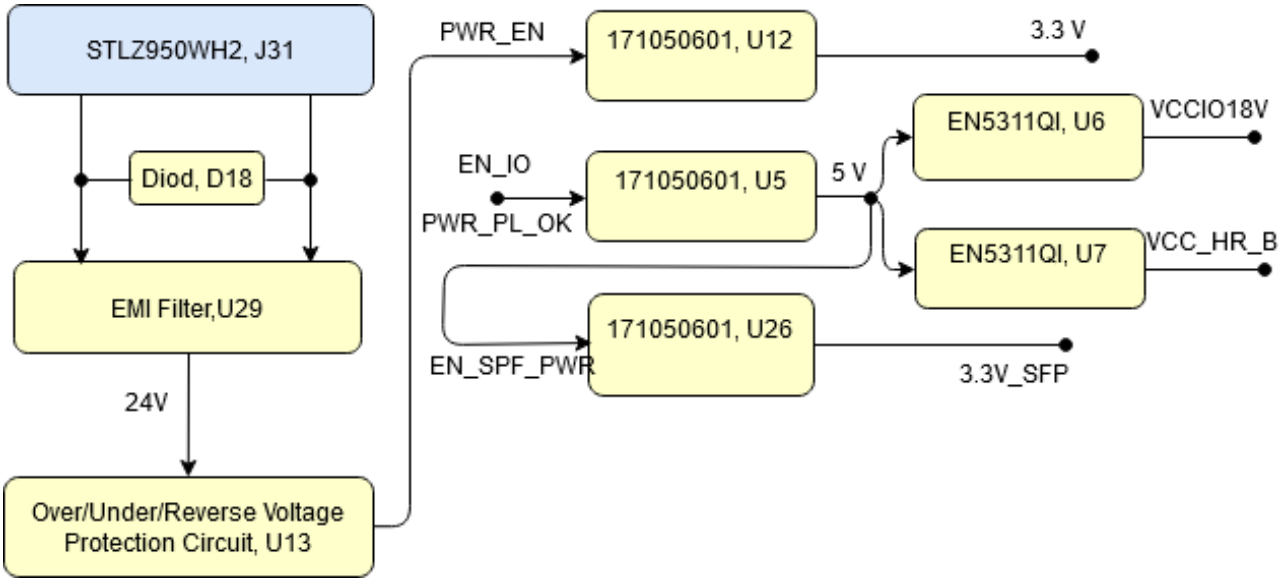

Figure 4: Power Sequency

7.5 Power Rails

Power Rail Name	B2B Connector JM1 Pin	B2B Connector JM2 Pin	B2B Connector JM3 Pin	Direction	Notes
3.3V	147, 149, 151, 153, 155, 157, 159	154, 156, 158,160	-	Output	PL_VIN
VCCIO12	54, 55	-	-	Output	high range bank I/O voltage
VCCIO13	112, 113	-	-	Output	high range bank I/O voltage
VCCIO33	-	-	115, 120	Output	high performance bank I/O voltage
VCCIO34	-	29, 30	-	Output	high performance bank I/O voltage
VCCIO35	-	87, 88	-	Output	high performance bank I/O voltage

Power Rail Name	B2B Connector JM1 Pin	B2B Connector JM2 Pin	B2B Connector JM3 Pin	Direction	Notes
VBAT_IN	146	-	-	Output	RTC (battery-backed) supply voltage
PS_1.8V	-	130	-	Input	internal 1.8V voltage level (Process System)

Table 24: Module power rails.

8 Board to Board Connectors

5.2 x 7.6 cm SoM Kintex modules use three Samtec Razor Beam LP Terminal Strip (ST5[1]) on the bottom side.

- 3x REF-192552-02 (160-pins)
  - ST5 Mates with SS5

5.2 x 7.6 cm SoM Kintex carrier use three Samtec Razor Beam LP Socket Strip (SS5[2]) on the top side.

- 3x REF192552-01 (160-pins)
  - SS5 Mates with ST5

1 https://www.samtec.com/products/st5
2 https://www.samtec.com/products/st5

9 Technical Specifications

9.1 Absolute Maximum Ratings

Symbols	Min	Max	Unit	Note
VIN Supply Voltage	0	24	V	
Storage Temperatur	-25	+85	°C	

Table 25: PS absolute maximum ratings

9.2 Recommended Operating Conditions

Operating temperature range depends also on customer design and cooling solution.

Parameter	Min	Max	Units	Reference Document
VIN Supply Voltage	20	25.4	V	See LTC4365ITS8 Datasheet
Operating Temperatur	-40	+85	°C	

Table 26: Recommended operating conditions.

9.3 Physical Dimensions

- Module size: 200 mm x 231 mm. Please download the assembly diagram for exact numbers.
- Mating height with standard connectors: 3.5 mm.
- PCB thickness: 1.6 mm.

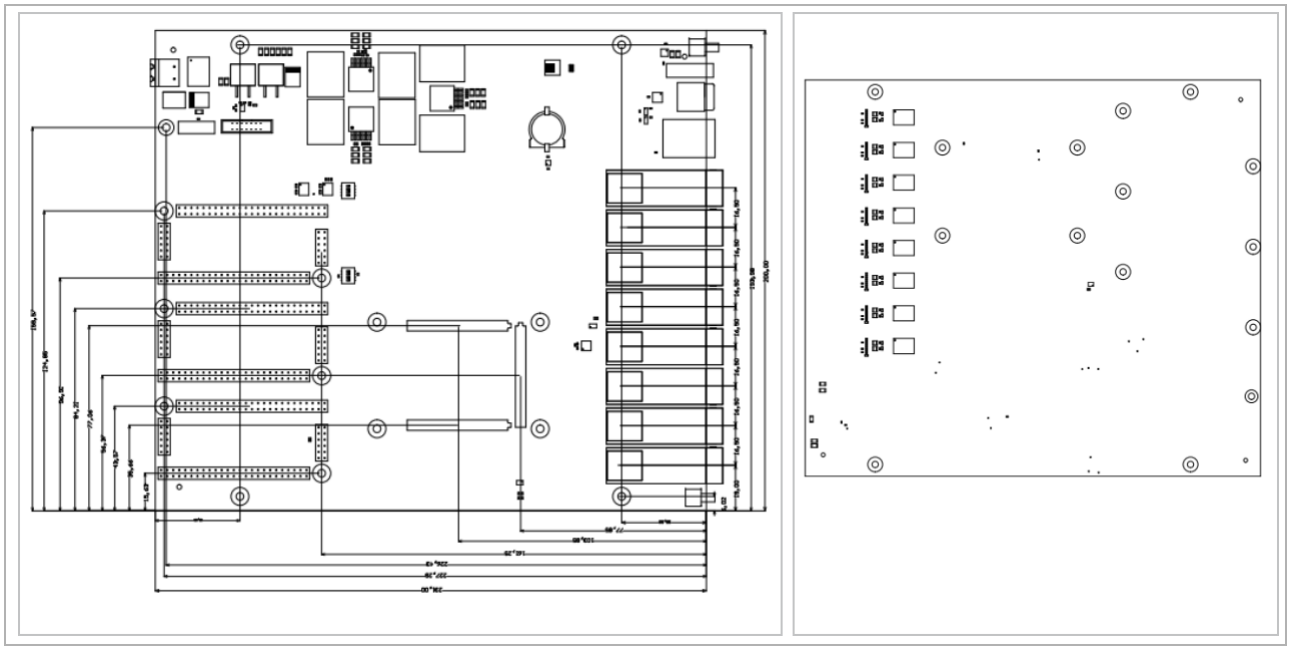

Figure 5: Physical dimensions drawing

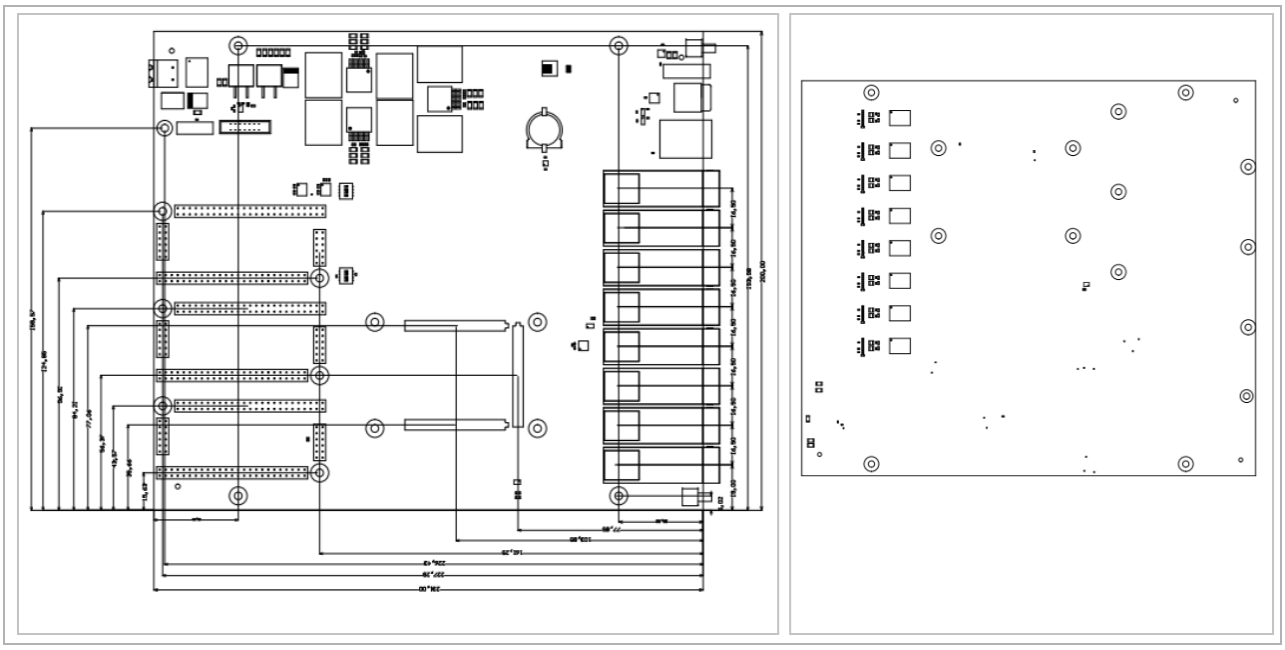

10 Currently Offered Variants

Trenz shop TEB0745 overview page	
English page[3]	German page[4]

Table 27: Trenz Electronic Shop Overview

3 https://shop.trenz-electronic.de/en/TEB0745-02-Carrierboard-for-a-TE0745
4 https://shop.trenz-electronic.de/de/TEB0745-02-Traegerboard-fuer-TE0745

11 Revision History

11.1 Hardware Revision History

Date	Revision	Changes	Documentation Link
2018-12-06	02a	• Resistors R14 and R15 was replaced by 953R (was 5K1) • Resistor R5 was replaced by 5K1, R8 by 953R (was 9K09 and 1K69 respectively)	REV02-A[5]
2018-10-19	02	• U16 I2C expander: address set to 0x72 • U33 EEPROM: address set to 0x51. Added variant to set address 0x52. • Changed power up sequence: 24V_FUSED -> 3.3V (Module power up) -> 5V -> VCCIO18, VCC_HR_B, 3.3V_SFP • Fixed PCB patch: U6 pin 18 connected to 5V, pin 19 connected to GND. • JTAG connector J30 VREF (pin2) and XMOD VIO (pin 6) connected to 3.3V. XMOD IO A, B, E, G connected to module MIO via level translator U8. • Pull-up for BOOTMODE and PS_SW (DIP switch S1), RST_IN_N and USR_BTN (front panel buttons S2, S3) changed from VCCIO18 to PS_1.8V; JTAG_EN connected to 3.3V via DIP switch (S1). • Added switch S4 for selecting of output voltage of DCDC U7 (VCC_HR_B, HR banks VCCO)	REV02[6]
2016-05-25	01	-	REV01[7]

Table 28: Hardware Revision History
Hardware revision number can be found on the PCB board together with the module model number separated by the dash.

5 https://shop.trenz-electronic.de/Download/?path=Trenz_Electronic/Modules_and_Module_Carriers/5.2x7.6/5.2x7.6_Carriers/TEB0745/REV02
6 https://shop.trenz-electronic.de/Download/?path=Trenz_Electronic/Modules_and_Module_Carriers/5.2x7.6/5.2x7.6_Carriers/TEB0745/REV02
7 https://shop.trenz-electronic.de/Download/?path=Trenz_Electronic/Modules_and_Module_Carriers/5.2x7.6/5.2x7.6_Carriers/TEB0745/REV01

Figure 6: Board hardware revision number.

11.2 Document Change History

Date	Revision	Contributor	Description
2020-09-01	v.135(see page 6)	John Hartfiel[8]	• Correction power sequencing picture
2019-012-08	v.134	Pedram Babakhani	• Technical Specifications Update
--	all	Pedram Babakhani[9] , John Hartfiel[10]	• --

Table 29: Document change history.

8 https://wiki.trenz-electronic.de/display/~j.hartfiel
9 https://wiki.trenz-electronic.de/display/~P.Babakhani
10 https://wiki.trenz-electronic.de/display/~j.hartfiel

12 Disclaimer

12.1 Data Privacy

Please also note our data protection declaration at https://www.trenz-electronic.de/en/Data-protection-Privacy

12.2 Document Warranty

The material contained in this document is provided “as is” and is subject to being changed at any time without notice. Trenz Electronic does not warrant the accuracy and completeness of the materials in this document. Further, to the maximum extent permitted by applicable law, Trenz Electronic disclaims all warranties, either express or implied, with regard to this document and any information contained herein, including but not limited to the implied warranties of merchantability, fitness for a particular purpose or non infringement of intellectual property. Trenz Electronic shall not be liable for errors or for incidental or consequential damages in connection with the furnishing, use, or performance of this document or of any information contained herein.

12.3 Limitation of Liability

In no event will Trenz Electronic, its suppliers, or other third parties mentioned in this document be liable for any damages whatsoever (including, without limitation, those resulting from lost profits, lost data or business interruption) arising out of the use, inability to use, or the results of use of this document, any documents linked to this document, or the materials or information contained at any or all such documents. If your use of the materials or information from this document results in the need for servicing, repair or correction of equipment or data, you assume all costs thereof.

12.4 Copyright Notice

No part of this manual may be reproduced in any form or by any means (including electronic storage and retrieval or translation into a foreign language) without prior agreement and written consent from Trenz Electronic.

12.5 Technology Licenses

The hardware / firmware / software described in this document are furnished under a license and may be used / modified / copied only in accordance with the terms of such license.

12.6 Environmental Protection

To confront directly with the responsibility toward the environment, the global community and eventually also oneself. Such a resolution should be integral part not only of everybody's life. Also enterprises shall be conscious of their social responsibility and contribute to the preservation of our common living space. That is why Trenz Electronic invests in the protection of our Environment.

12.7 REACH, RoHS and WEEE

REACH

Trenz Electronic is a manufacturer and a distributor of electronic products. It is therefore a so called downstream user in the sense of REACH[11]. The products we supply to you are solely non-chemical products (goods). Moreover and under normal and reasonably foreseeable circumstances of application, the goods supplied to you shall not release any substance. For that, Trenz Electronic is obliged to neither register nor to provide safety data sheet. According to present knowledge and to best of our knowledge, no SVHC (Substances of Very High Concern) on the Candidate List[12] are contained in our products. Furthermore, we will immediately and unsolicited inform our customers in compliance with REACH - Article 33 if any substance present in our goods (above a concentration of 0,1 % weight by weight) will be classified as SVHC by the European Chemicals Agency (ECHA)[13].

RoHS

Trenz Electronic GmbH herewith declares that all its products are developed, manufactured and distributed RoHS compliant.

WEEE

Information for users within the European Union in accordance with Directive 2002/96/EC of the European Parliament and of the Council of 27 January 2003 on waste electrical and electronic equipment (WEEE).

Users of electrical and electronic equipment in private households are required not to dispose of waste electrical and electronic equipment as unsorted municipal waste and to collect such waste electrical and electronic equipment separately. By the 13 August 2005, Member States shall have ensured that systems are set up allowing final holders and distributors to return waste electrical and electronic equipment at least free of charge. Member States shall ensure the availability and accessibility of the necessary collection facilities. Separate collection is the precondition to ensure specific treatment and recycling of waste electrical and electronic equipment and is necessary to achieve the chosen level of protection of human health and the environment in the European Union. Consumers have to actively contribute to the success of such collection and the return of waste electrical and electronic equipment. Presence of hazardous substances in electrical and electronic equipment results in potential effects on the environment and human health. The symbol consisting of the crossed-out wheeled bin indicates separate collection for waste electrical and electronic equipment.

Trenz Electronic is registered under WEEE-Reg.-Nr. DE97922676.

2019-06-07

11 http://guidance.echa.europa.eu/
12 https://echa.europa.eu/candidate-list-table
13 http://www.echa.europa.eu/